Strom Plumbing
BY
Sign of the Crab

Ph: (916) 638-2722 / Fax: (916) 638-2725

Installation Information

Item #P0901
Exposed Shower Set with 7” Centers

Warranted only if installed by a qualified licensed plumber.

1. **Shut off the water supply before installation.**
2. **Rough-in ½” Male IPS with ½” of threads past the finished wall at 7” centers.**
3. **Thread on the straight wall mount couplers to the ½” nipples extending out from finished wall, use Teflon paste or tape.**
4. **Connect the main valve body to the wall mount couplers.**
5. **Thread the shower arm into the 90 degree ball elbow using a clear two part epoxy.**
6. **Thread the 36” riser into the ball elbow using a clear two part epoxy. Insert the riser into the valve body and tighten the compression nut to seal the riser connection.**
7. **Attach the wall bracket escutcheon to the wall at desired height. Wall support may need to be cut to length, cut non-threaded end only. Secure to riser with the c-clamp provided.**
8. **Attach shower head to the shower arm using Teflon paste or tape.**

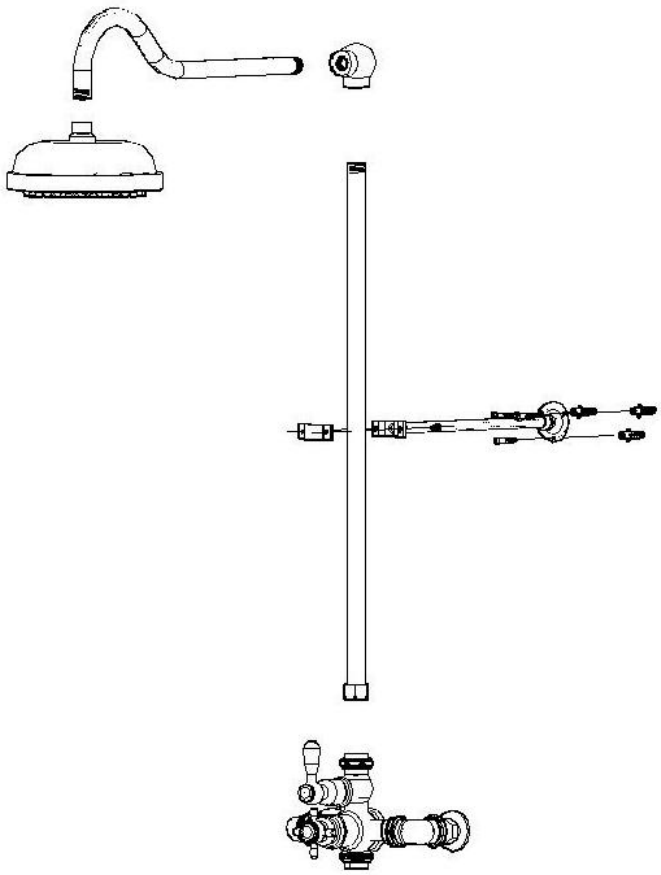

Parts Included:

(1) Thermostatic valve body
(1) 36” Riser
(1) 12” Wall Support
(1) 90 degree Ball Elbow
(1) Shower Arm
(1) Shower Head

This faucet is tested to remain within 1 degree Fahrenheit of your desired setting throughout its operation, with an automatic temperature stop at 104 degrees Fahrenheit. The unit also has a built-in anti-syphon.

NOTE:
THIS UNIT IS NOT WARRANTED FOR OUTDOOR USE.